TOPOLOGICAL COMPLEXITY OF KINEMATIC MAPS

Petar Pavešić, University of Ljubljana

In a mechanical device, like a robot arm, the forward kinematic map relates the configuration space of the joints to the working space of the device. A typical kinematic map is smooth but with certain singularities, and it admits only partial inverses. We are going to describe a general setting for the study of the motion planning problem in this context, and discuss the complexity of some simple joint configurations.

Lisboa - 2015

TOPOLOGICAL COMPLEXITY

Motion planning in configuration spaces:

$\mathcal{C}$ - **configuration space** of a mechanical device

Find <u>robust</u> rules that product paths connecting any two given configurations in $\mathcal{C}$.

$(c_{init}, c_{fin}) \in \mathcal{C} \times \mathcal{C}$ **query**

$\rho: \mathcal{C} \times \mathcal{C} \to P\mathcal{C},\ \rho(c_{init}, c_{fin})(0) = c_{init},\ \rho(c_{init}, c_{fin})(1) = c_{fin}$ **roadmap**

(Farber) Global roadmap exists $\Leftrightarrow$ $\mathcal{C}$ is contractible.

Consider partial roadmaps, defined on subsets of $\mathcal{C} \times \mathcal{C}$.

$\boldsymbol{TC(\mathcal{C})}:=$ minimal number of partial roadmaps, needed to satisfy all queries.

$$\begin{tikzcd} & P\mathcal{C} \arrow[d, "\pi"] \\ \mathcal{Q} \arrow[ur, dashed, "\rho"] \arrow[r] & \mathcal{C} \times \mathcal{C} \end{tikzcd} \qquad \begin{tikzcd} \alpha \arrow[d] \\ (\alpha(0), \alpha(1)) \end{tikzcd}$$

Partial roadmaps are partial sections of π.

π is a fibration $\longrightarrow$ $TC(\mathcal{C})$ is the Schwarz genus of π

In particular, $TC(\mathcal{C})$ is a homotopy invariant of $\mathcal{C}$.

Extensive computations of $TC(\mathcal{C})$ based on explicit roadmaps (upper bounds) and cohomology obstructions (lower bounds).

Actual motion planning is more complex:

robot device → **configuration space** $\mathcal{C}$ (position of joints)

$\downarrow$ f – **forward kinematic map**

robot device → **working space** $\mathcal{W}$ (spatial position of the device)

planar joints

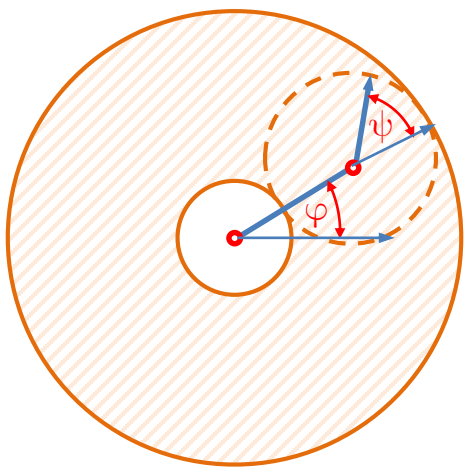

$$\mathcal{C} = T^2 = \{(e^{i\varphi}, e^{i\psi}) \in S^1 \times S^1\}$$

$$\mathcal{W} = \{(x,y) \in \mathbb{R}^2 | (R-r)^2 \leq x^2 + y^2 \leq (R+r)^2\}$$

$$f(e^{i\varphi}, e^{i\psi}) = (R\cos\varphi + r\cos(\varphi+\psi),\ R\sin\varphi + r\sin(\varphi+\psi))$$

universal joint

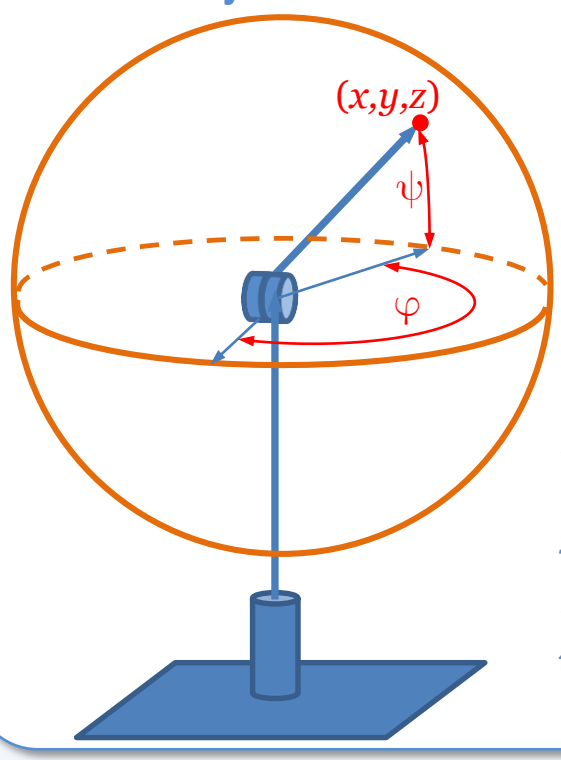

$$\mathcal{C} = T^2$$

$$\mathcal{W} = S^2$$

$$x = r\cos\psi\cos\varphi$$
$$y = r\cos\psi\sin\varphi$$
$$z = r\sin\psi$$

robot arm wrist

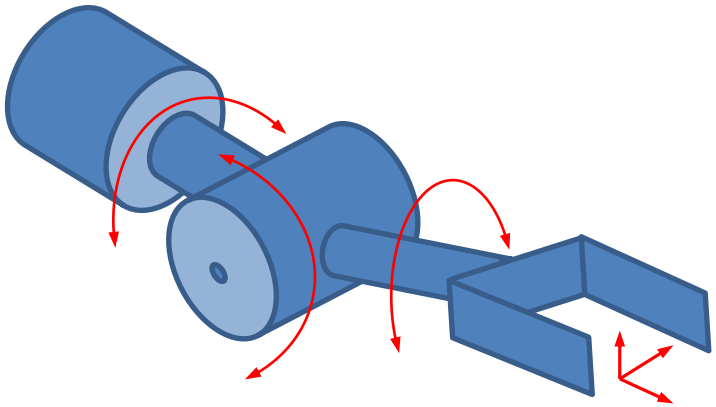

$\mathcal{C} = T^3 \qquad \mathcal{W} = SO(3)$

Forward kinematic map $f: T^3 \longrightarrow SO(3)$ is given In terms of Euler angles as

$$f\left(e^{i\varphi}, e^{i\psi}, e^{i\theta}\right) = \begin{bmatrix} \cos\varphi\cos\psi\cos\theta - \sin\varphi\sin\theta & -\cos\theta\sin\varphi - \cos\varphi\cos\psi\sin\theta & \cos\varphi\sin\psi \\ \cos\varphi\sin\theta + \cos\psi\cos\theta\sin\varphi & \cos\varphi\cos\theta - \cos\psi\sin\varphi\sin\theta & \sin\varphi\sin\psi \\ -\cos\psi\sin\psi & \sin\psi\sin\theta & \cos\psi \end{bmatrix}$$

MOTION PLANNING

$f: \mathcal{C} \longrightarrow \mathcal{W}$ forward kinematic map from a configuration space $\mathcal{C}$ to a working space $\mathcal{W}$

Find robust rules to move the device from a given joint configuration to a desired position in the working space.

$(c_{init}, w_{fin}) \in \mathcal{C} \times \mathcal{W}$ **query**

$\rho: \mathcal{C} \times \mathcal{W} \to P\mathcal{C},\ \rho(c_{init}, w_{fin})(0) = c_{init},\ f(\rho(c_{init}, w_{fin})(1)) = w_{fin}$ **roadmap**

(Dranishnikov) Global roadmap exists $\Rightarrow$ f admits a section.

Proof: given $\rho: \mathcal{C} \times \mathcal{W} \to P\mathcal{C},\ \ w \longmapsto \rho(c_0, w)(1)$ is a section of f.

If f does not admit a section consider partial roadmaps, defined on subsets of $\mathcal{C} \times \mathcal{W}$.

$\boldsymbol{TC(f)}:=$ minimal number of partial roadmaps, needed to satisfy all queries.

Assume $\mathcal{C}$, $\mathcal{W}$, $\mathcal{Q}$ are ENRs:

$$\begin{tikzcd} & P\mathcal{C} \arrow[d, "(1\times f)\pi"] \\ \mathcal{Q} \arrow[ur, dashed, "\rho"] \arrow[r] & \mathcal{C}\times\mathcal{W} \end{tikzcd} \qquad \begin{tikzcd} \alpha \arrow[d] \\ (\alpha(0), f(\alpha(1))) \end{tikzcd}$$

Partial roadmaps are partial sections of $(1 \times f)\pi$.

If f is a fibration, then $TC(f)$ is the Schwarz genus of $(1 \times f)\pi$.

However, forward kinematic maps that arise in practice:

(1) do not admit inverse kinematic maps (i.e. sections), and

(2) are smooth but always have singular points (where Jacobian does not have maximal rank). Therefore are <u>not fibrations</u>.

(D. Gottlieb, 1986, 1988)

In general $TC(f) \geq$ Schwarz genus of $(1 \times f)\pi$ (and the difference can be arbitrarily big).

Problem: compute $TC(f)$ for basic robot arm configurations.

Observe: $TC(1_X)=TC(X)$.

Two special cases:

(1) Assume $f:\mathcal{C} \longrightarrow \mathcal{W}$ admits section $s:\mathcal{W} \longrightarrow \mathcal{C}$:

Then, to move from $c \in \mathcal{C}$ to $w \in \mathcal{W}$ it is sufficient to move from c to $s(w)$ in $\mathcal{C}$, and to move from w to w' in $\mathcal{W}$ it is sufficient to more from $s(w)$ to w'.

$$f \text{ sectioned} \Longrightarrow TC(\mathcal{W}) \leq TC(f) \leq TC(\mathcal{C})$$

(2) Assume $f:\mathcal{C} \longrightarrow \mathcal{W}$ fibration:

Then, to move from $c \in \mathcal{C}$ to $w \in \mathcal{W}$ it is sufficient to find a path in $\mathcal{W}$ from $f(c)$ to w, and lift it to $\mathcal{C}$ starting at c.

$$f \text{ fibration} \Longrightarrow \quad TC(f) \leq TC(\mathcal{W})$$

In general, avoid singularities and split into subsets that admit local sections.

RELATIVE COMPLEXITY

$f: \mathcal{C} \longrightarrow \mathcal{W}, \mathcal{Q} \subseteq \mathcal{C} \times \mathcal{W}$

$\boldsymbol{TC(f|\mathcal{Q})}$ = minimal number of partial roadmaps, needed to satisfy all queries in $\mathcal{Q}$.

Properties:

(1) $TC(f|\Gamma(f)) = 1$

(2) $\mathcal{Q} \subseteq \mathcal{Q}' \implies TC(f|\mathcal{Q}) \leq TC(f|\mathcal{Q}')$

(3) $TC(f|\mathcal{Q} \cup \mathcal{Q}') \leq TC(f|\mathcal{Q}) + TC(f|\mathcal{Q}')$

(4) If $\mathcal{Q}'$ can be horizontally deformed into $\mathcal{Q}$, then $TC(f|\mathcal{Q}) \geq TC(f|\mathcal{Q}')$

In particular, if $\mathcal{Q}'$ can be horizontally deformed to a subset $\mathcal{Q}$, then $TC(f|\mathcal{Q}) = TC(f|\mathcal{Q}')$.

$f: \mathcal{C} \longrightarrow \mathcal{W}$ smooth

$\mathcal{W}^r :=$ regular values of f, $\mathcal{C}^r := f^{-1}(\mathcal{W}^r)$

$$TC(f|\mathcal{C}^r \times \mathcal{W}^r) \leq TC(f|\mathcal{W}^r)$$
$$TC(f|\mathcal{C} \times \mathcal{W}^r) \leq cat(\mathcal{C} \times \mathcal{W}^r)$$

$f: \mathcal{C} \longrightarrow \mathcal{W}$ admits a partial section s over $\mathcal{W}'$, $\mathcal{C}' := f^{-1}(\mathcal{W}')$

$$TC(\mathcal{W}|\mathcal{W} \times \mathcal{W}') \leq TC(f|\mathcal{C} \times \mathcal{W}') \leq TC(\mathcal{C}|\mathcal{C} \times s(\mathcal{W}'))$$

Moreover,

if $\mathcal{C}'$ can be deformed to $s(\mathcal{W}')$, then $TC(f|\mathcal{C} \times \mathcal{W}') = TC(\mathcal{C}|\mathcal{C} \times s(\mathcal{W}'))$

and

if $\mathcal{W}' \subseteq \mathcal{W}^r$, then $TC(f|\mathcal{C}' \times \mathcal{W}') = TC(\mathcal{W}')$

If $\mathcal{C}$ is a topological group, then $TC(\mathcal{C}|\mathcal{C} \times s(\mathcal{W}')) = TC(\mathcal{C}) = cat(\mathcal{C})$.

planar joints

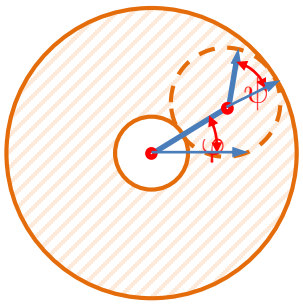

Kinematic map is sectioned and is regular except for $\psi = 0, \pi$.

$$\Longrightarrow \quad 2 = TC(S^1 \times I) \leq TC(f) \leq TC(T^2) = 3$$

Furthermore, for $\mathcal{C}' = S^1 \times 0$ we have

$$TC(f) \geq TC(f|T^2 \times f(\mathcal{C}')) = TC(T^2|T^2 \times \mathcal{C}') = 3.$$

Therefore $TC(f) = 3$.

universal (Cardan) joint

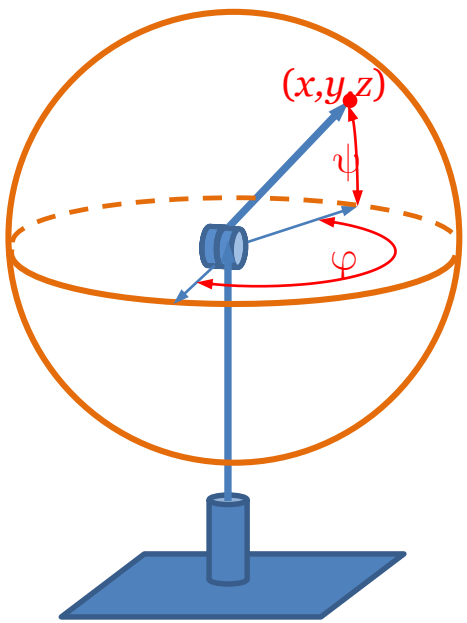

Kinematic map is regular except for $\psi = \pm\frac{\pi}{2}$, and is sectioned over $S^2 - \{\text{poles}\}$.

Previous results yield $3 \leq TC(f) \leq 5, \ldots$

… which may be improved to $4 \leq TC(f) \leq 5$, by a careful analysis of extensions of roadmaps around singular points.

robot arm wrist

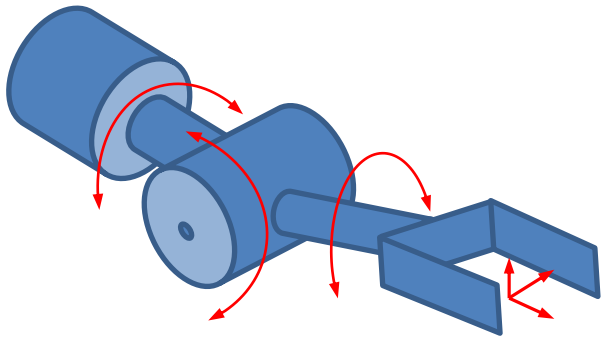

Singular values of f are rotations whose Z-axis coincides with the Z-axis of the reference frame. These are matrices of the form

$$\begin{bmatrix} \cos\theta & -\sin\theta & 0 \\ \sin\theta & \cos\theta & 0 \\ 0 & 0 & 1 \end{bmatrix}$$

corresponding to points on a circle in $SO(3)$.

Singular points are of the form $\left(e^{i\varphi}, 1, e^{i\theta}\right)$ and $\left(e^{i\varphi}, -1, e^{i\theta}\right)$, corresponding to points in a disjoint union of two two-dimensional tori in T^3.

f admits a section on the complement of singular points, and the previous estimates yield $4 \leq TC(f) \leq 6$.

Further results

We implicitly used cohomological lower bounds for the topological complexity of various configuration and working spaces.

One can also consider the diagram for partial liftings

$$\begin{tikzcd} & P\mathcal{C} \arrow[d, "(1\times f)\pi"] \\ \mathcal{Q} \arrow[ur, dashed, "\rho"] \arrow[r] & \mathcal{C}\times\mathcal{W} \end{tikzcd}$$

and use the standard approach to derive the estimate

$$TC(f) \geq \mathrm{nil}(\mathrm{Ker}(1,f)^*: H^*(\mathcal{C}\times\mathcal{W}) \longrightarrow H^*(\mathcal{C}))$$

(Also follows from the fact that $TC(f)$ is bigger than the Schwarz genus of $(1\times f)\pi$.)

THANKS!